Ashford Instrumentation Ltd
Tel: 01233 730999
Fax: 01233 731133
E-mail: sales@ashfordinstrumentation.com

Drawing Number:	AIT5FF
Product	5-Valve Manifold
Date:	1st March 2013
Issue:	1

Drawing Not To Scale
Dimensions In Millimetres

MODEL: Generation 200 Remote Mount Pipe To Pipe 5-Valve Manifold

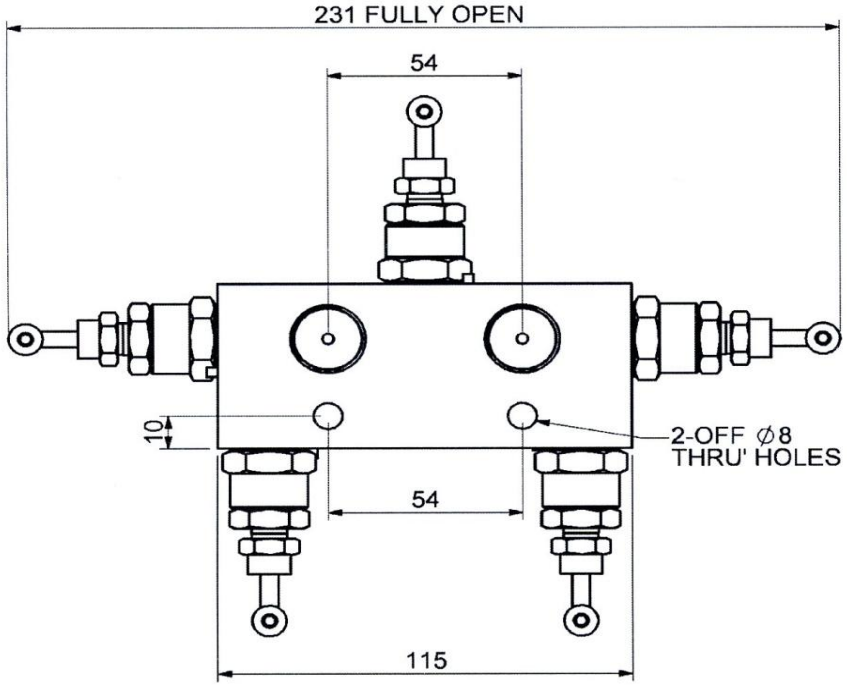

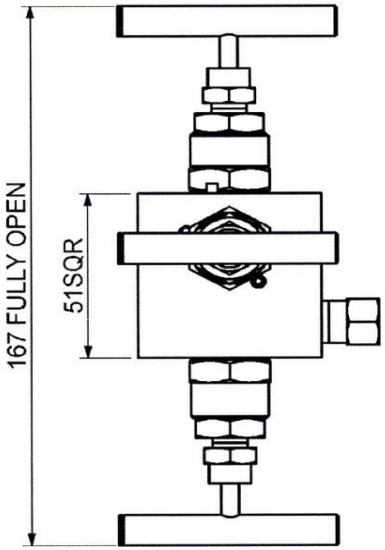

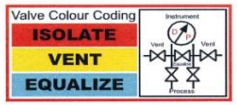

To Ensure Product Is Supplied To The Above Dimensions Ensure Drawing Number Is Quoted On Any Purchase Order Raised. Unspecified Product May Vary.

Dimensions

Specification

Material:	316 Stainless Steel
Pressure Rating:	400 Bar / 6000 PSI