Ashford Instrumentation Ltd
Tel: 01233 730999
Fax: 01233 731133
E-mail: sales@ashfordinstrumentation.com

Drawing Number:	DMS801/063/01
Product	63mm Subsea Gauge
Date:	15th January 2014
Issue:	1

Drawing Not To Scale

MODEL: 63mm Compensated Subsea Pressure Gauge Bottom Entry

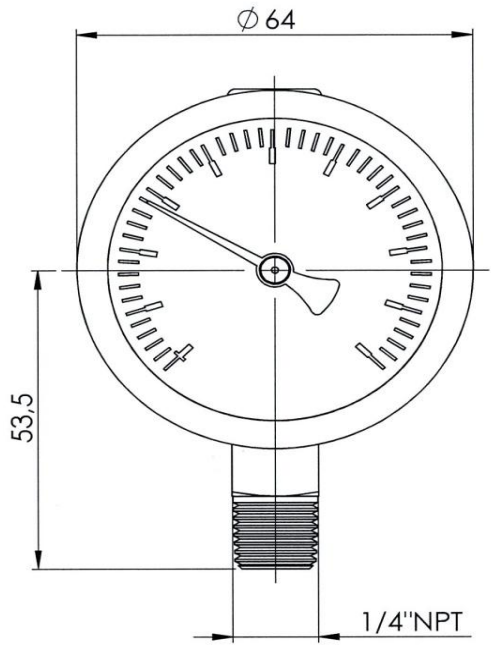

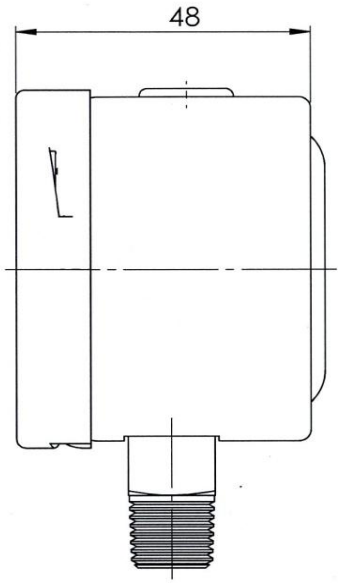

Dimensions In Millimetres

Specification

Housing:	316 Stainelss Steel
Wetted Parts:	316 Stainless Steel
Process Connection:	1/4" NPT
Accuracy:	Class 1