Ashford Instrumentation Ltd
Tel: 01233 730999
Fax: 01233 731133
E-mail: sales@ashfordinstrumentation.com

Drawing Number:	DMS800/100/01
Product	100mm Subsea Gauge
Date:	15th January 2014
Issue:	1

Drawing Not To Scale

MODEL: 100mm Compensated Subsea Pressure Gauge Bottom Entry

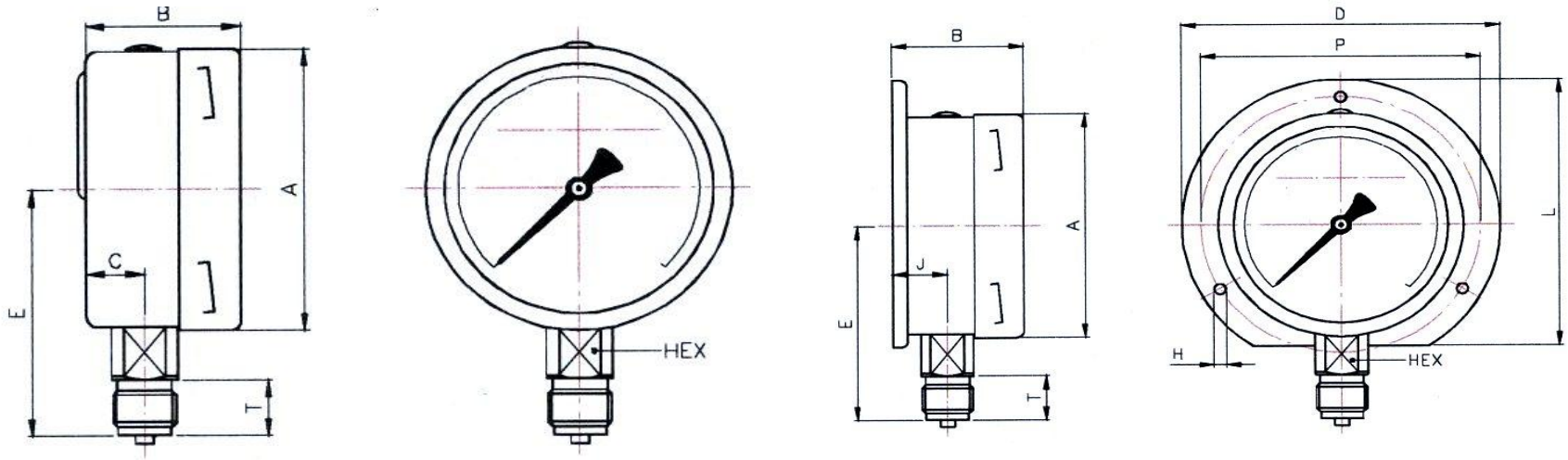

A	101,5
B	51
C	19
E	88
T	20
HEX	22

A	101,5
B	51
C	33
E	92
T	20
HEX	22

Dimensions In Millimetres

Specification

Housing:	316 Stainelss Steel
Wetted Parts:	316 Stainless Steel
Process Connection:	1/2" BSP or NPT
Accuracy:	Class 1