Ashford Instrumentation Ltd
Tel: 01233 730999
Fax: 01233 731133
E-mail: sales@ashfordinstrumentation.com

Drawing Number:	AIA1MF&FF
Product	Needle Valve
Date:	1st January 2014
Issue:	1

Drawing Not To Scale
Dimensions In Millimetres

MODEL: Generation 200 Male/Female & Female/Female Needle Valve

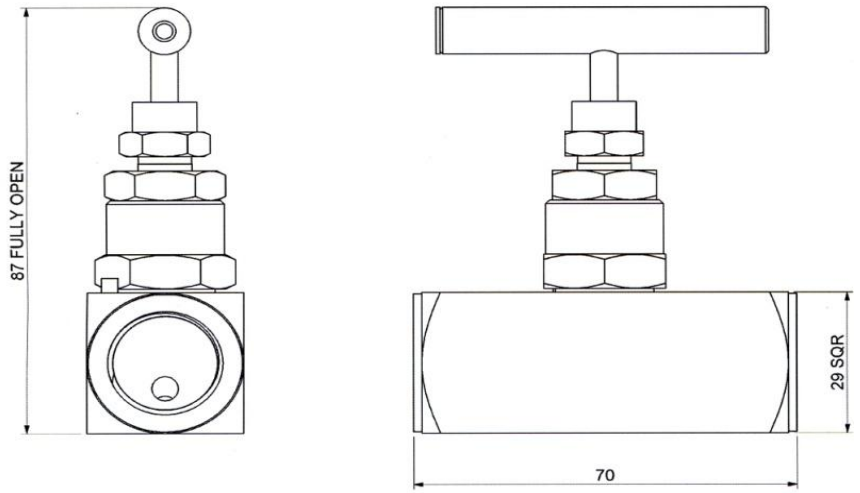

Female / Female

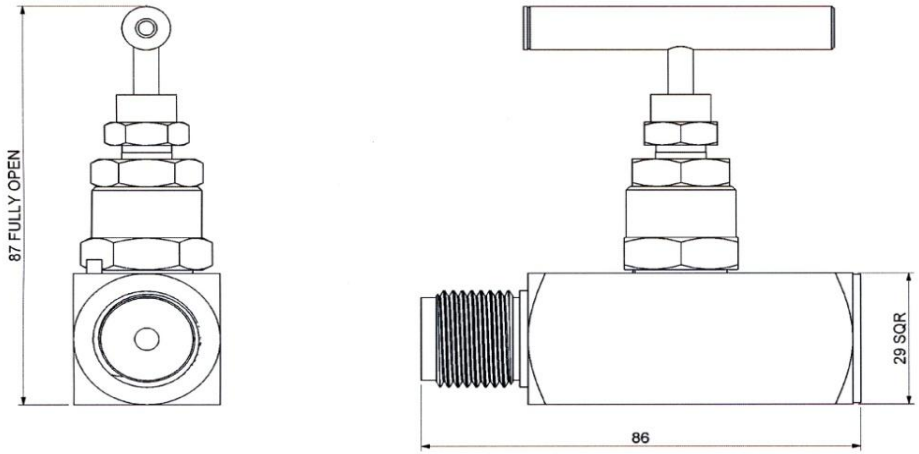

Male / Female

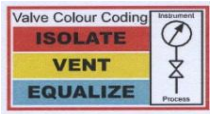

To Ensure Product Is Supplied To The Above Dimensions Ensure Drawing Number Is Quoted On Any Purchase Order Raised. Unspecified Product May Vary.

Dimensions

Specification

Material:	316 Stainless Steel
Pressure Rating:	400 Bar / 6000 PSI