Ashford Instrumentation Ltd
Tel: 01233 730999
Fax: 01233 731133
E-mail: sales@ashfordinstrumentation.com

Drawing Number:	AIJ1FF
Product	Needle Valve
Date:	10th January 2014
Issue:	1

Drawing Not To Scale
Dimensions In Millimetres

MODEL: Generation 200 In-Line Needle Valve Female / Female 2000 Bar

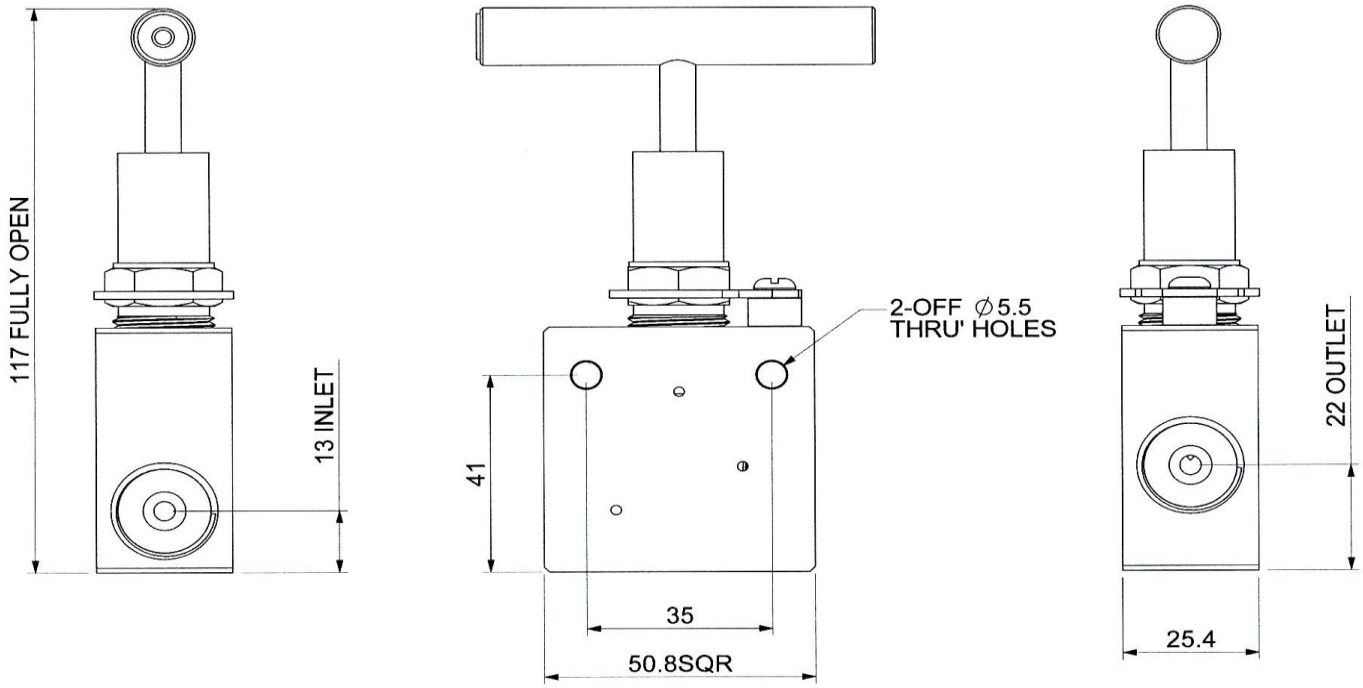

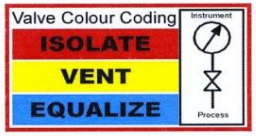

To Ensure Product Is Supplied To The Above Dimensions Ensure Drawing Number Is Quoted On Any Purchase Order Raised. Unspecified Product May Vary.

Dimensions

Specification

Material:	316 Stainless Steel
Pressure Rating:	2000 Bar / 30000 PSI