Ashford Instrumentation Ltd
Tel: 01233 730999
Fax: 01233 731133
E-mail: sales@ashfordinstrumentation.com

Drawing Number:	AIE1&F1MF
Product	Needle Valve
Date:	1st January 2014
Issue:	1

Drawing Not To Scale
Dimensions In Millimetres

MODEL: Generation 200 Male/Female In-line Needle Valve With Bleed Or Vent Plug

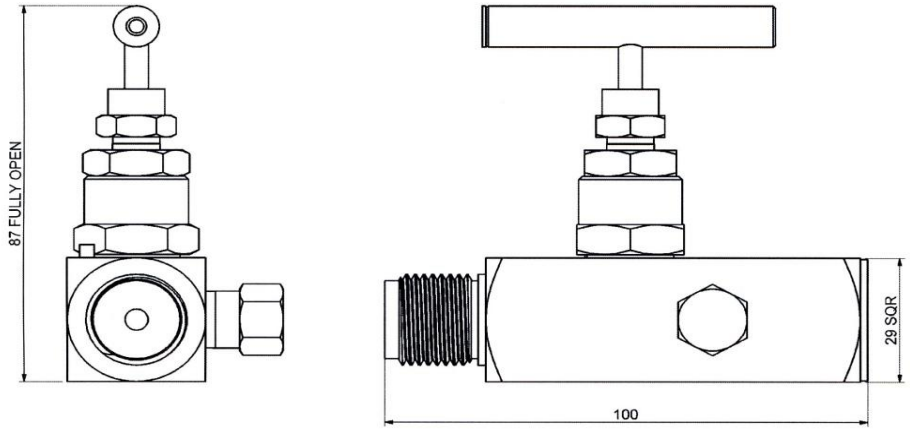

Model AIE1: In-Line Valve With Vent Plug

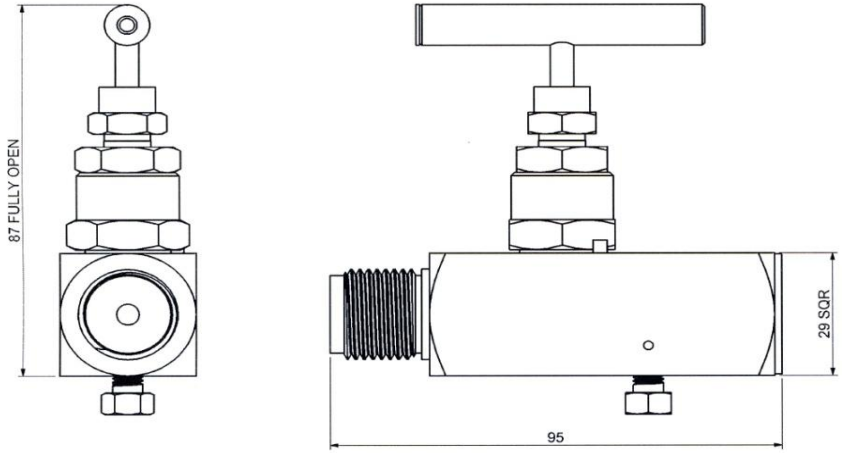

Model AIF1: In-Line Valve With Bleed Plug

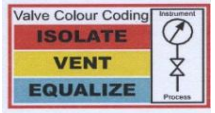

To Ensure Product Is Supplied To The Above Dimensions Ensure Drawing Number Is Quoted On Any Purchase Order Raised. Unspecified Product May Vary.

Dimensions

Specification

Material:	316 Stainless Steel
Pressure Rating:	400 Bar / 6000 PSI